FRL
JC
FE
GC
ZYR10
MAR300LK
AC, BC
AFC, BFC
AF, BF
AR, BR
AFR, BFR
AL, BL
JAC
JAF
JAR
JAW
JAL
PTH
JAD

AFR2000

AFR2000

BFR(2000～4000)

Ordering Code

BFR	-	2000	-	D
Model		Port size		Drain Type
AFR: Small		1500: G 1/8″		Blank: Semi-automatic
BFR: Medium		2000: G 1/4″		D: Automatic
		3000: G 3/8″		* Not applied to AFR
		4000: G 1/2″		

Symbol

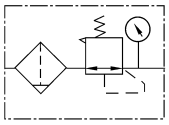

Specification

Model		AFR1500	AFR2000	BFR2000	BFR3000	BFR4000
Operating Fluid		Air				
Port Size		G 1/8″	G 1/4″	G 1/4″	G 3/8″	G 1/2″
Range of Adjustable Pressure		0.05～0.85 MPa				
Max. Adjustable Pressure		0.95 MPa				
Proof Pressure Resistance		1.5 MPa				
Operating Temperature Range		5～60 ℃				
Capacity of Filter Cup		15 cc		60 cc		
Weight		0.26 KG		0.4 KG		
Material	Body	Aluminum Alloy , Die-casting Forming				
	Container Cup	PC				
	Protective Cover	-		Iron		

Overall Dimension

AFR

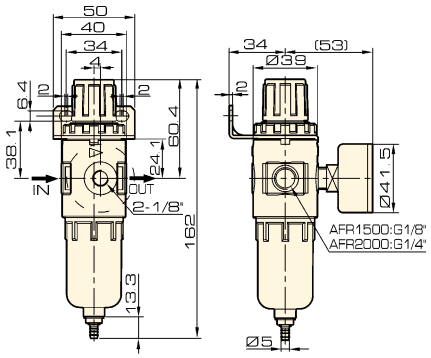
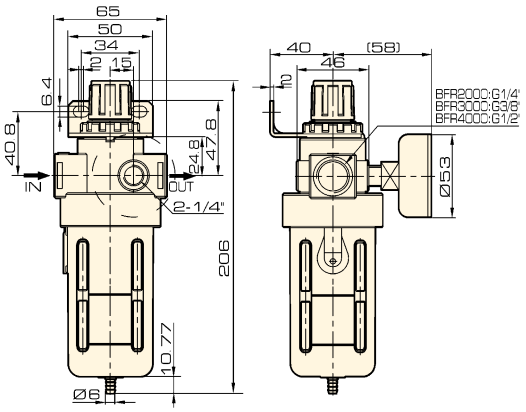
BFR